A 3

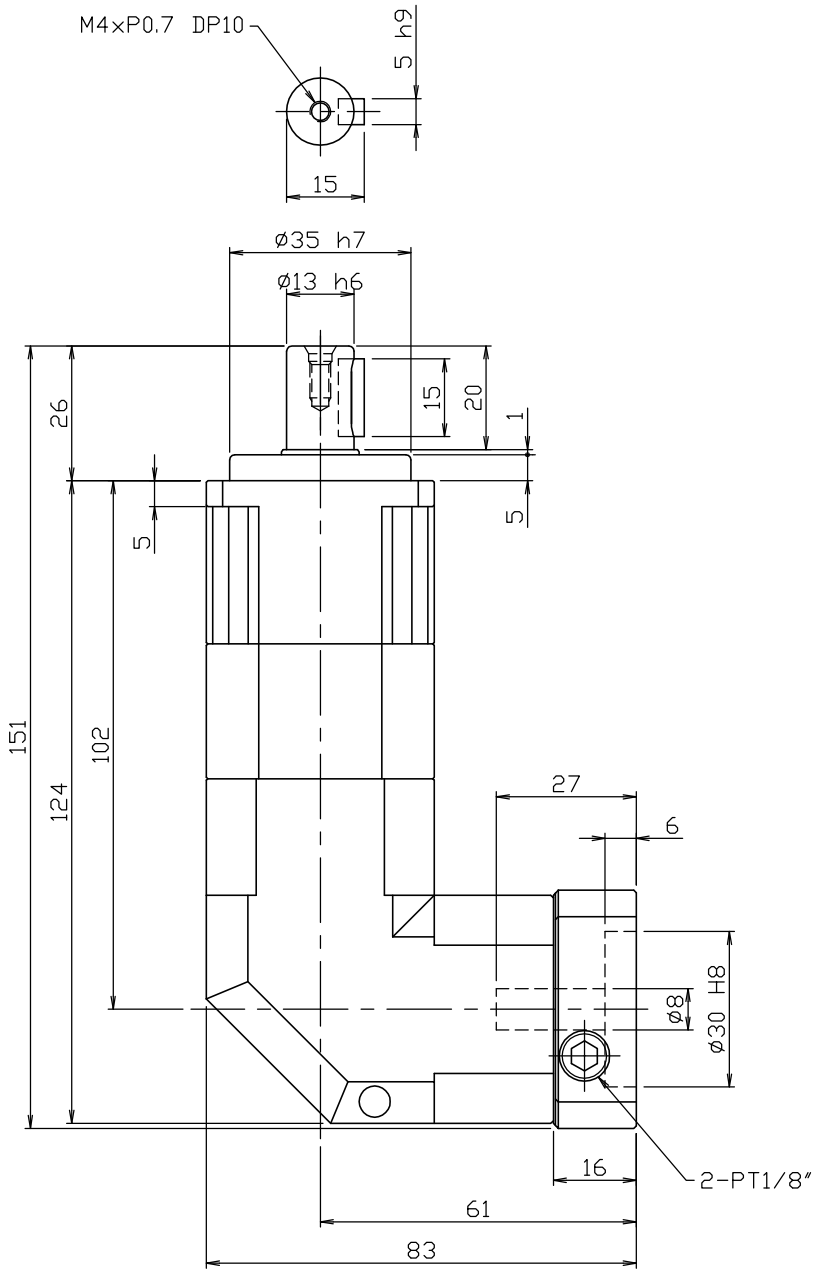

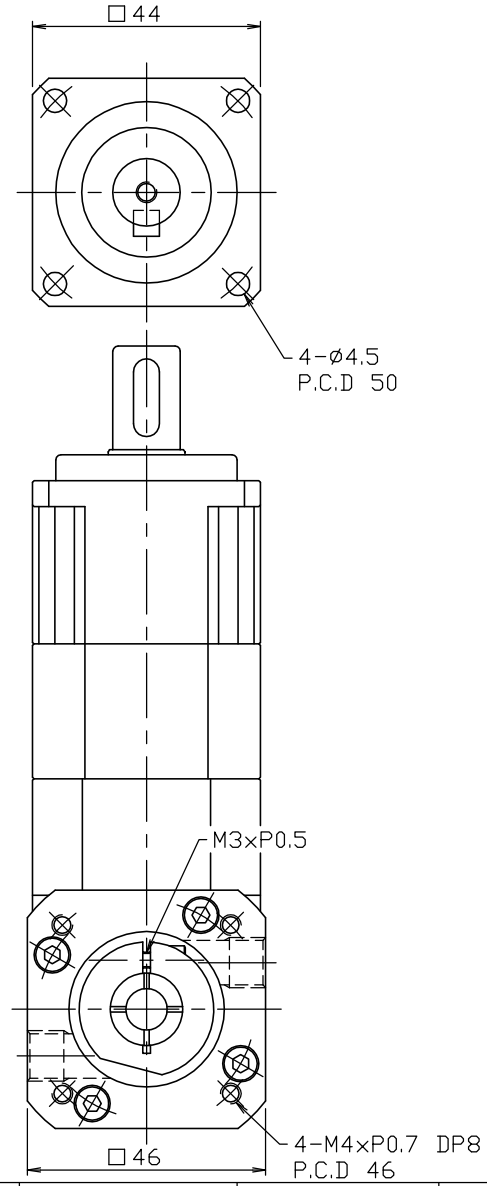

No	DRAWING NUMBER	DESCRIPTION	MATERIAL	Q'TY	REMARK

3RD ANGLE	UNIT	mm	DATE	2012. 02. 02	TITLE	PLANETARY GEARBOX
	SCALE	1 / 1	DESIGN	H.Y LEE	DWG. No	
A T G			CHECK		MODEL	PBL44-H-2
			APPROVE		PROJECT	