A 3

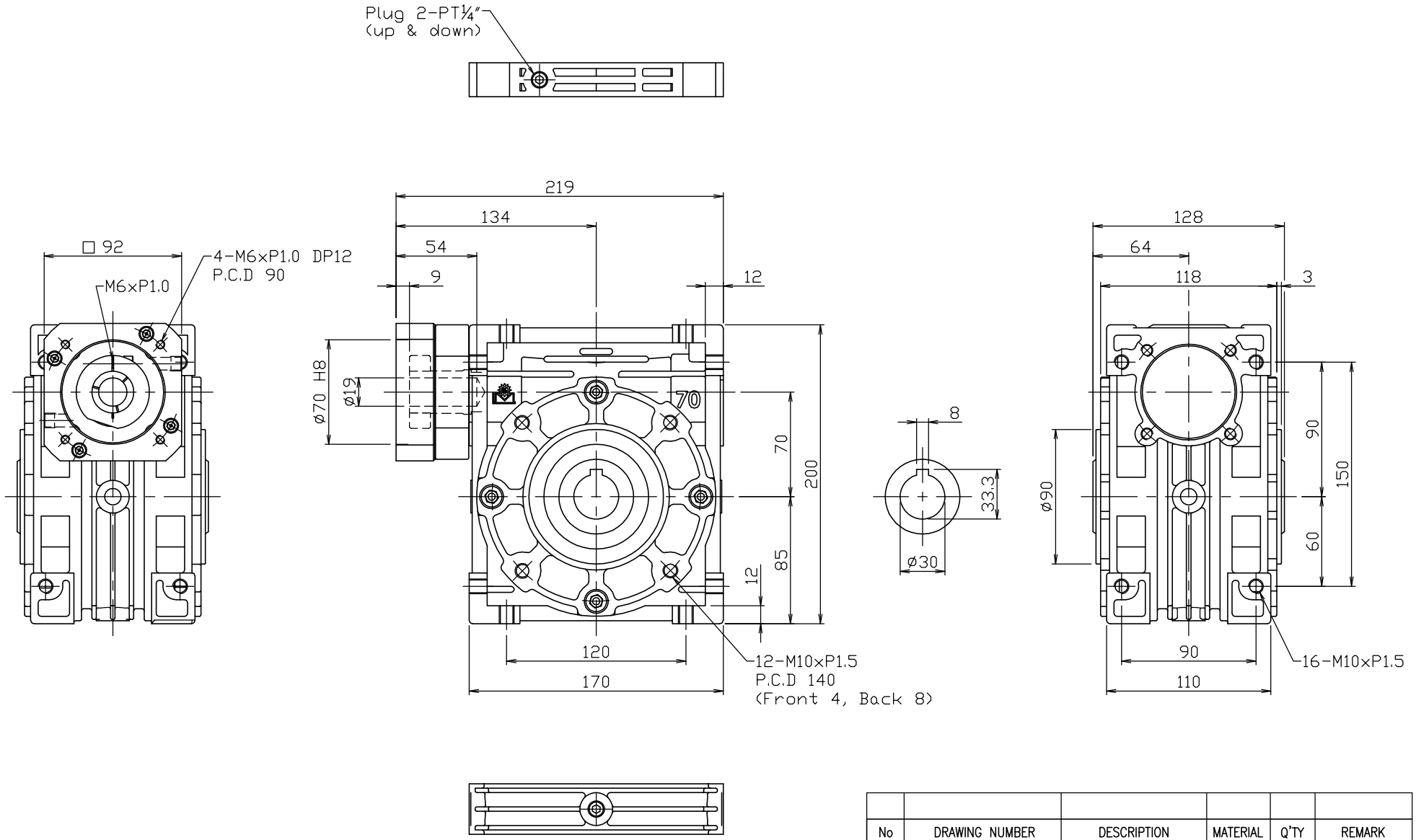


| No | DRAWING NUMBER | | DESCRIPTION | | MATERIAL | Q'TY | REMARK |
|---|---|---|---|---|---|---|---|
| 3RD ANGLE | UNIT | mm | DATE | 2013. 01. 02 | TITLE | PLANETARY GEARBOX | |
| | SCALE | 1 /2.5 | DESIGN | H.Y LEE | DWG. No | | |
| A T G | | | CHECK | | MODEL | KWE070 (S19) | |
| | | | APPROVE | | PROJECT | | |